ZONE	SYMBOL	REVISION	APPROVAL	DATE

RoHS Compliant

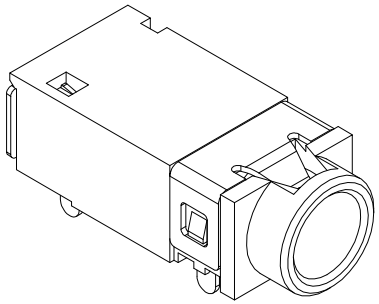

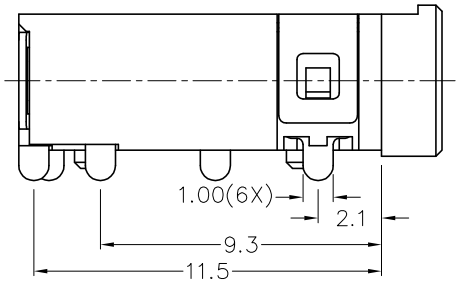

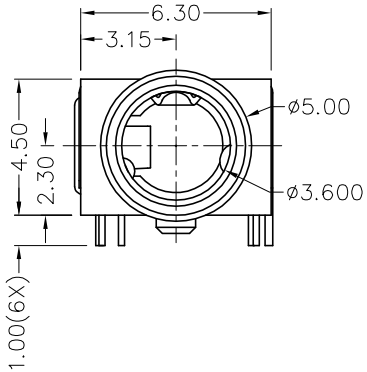

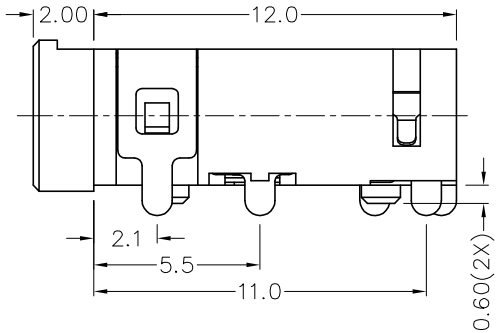

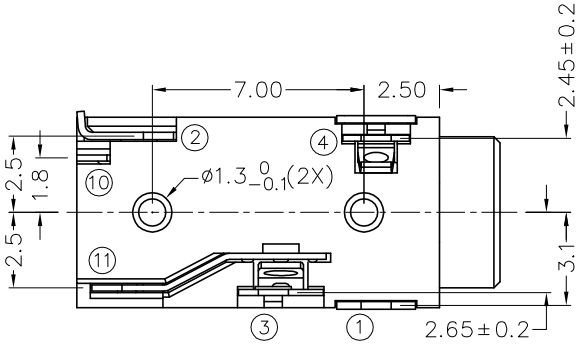

＊ MATERIAL

TERMINAL 1 : COPPER ALLOY
TERMINAL 2 : COPPER ALLOY
TERMINAL 3 : COPPER ALLOY
TERMINAL 4 : COPPER ALLOY
TERMINAL 10 : BRASS
TERMINAL 11 : BRASS
HOUSING : PA6T

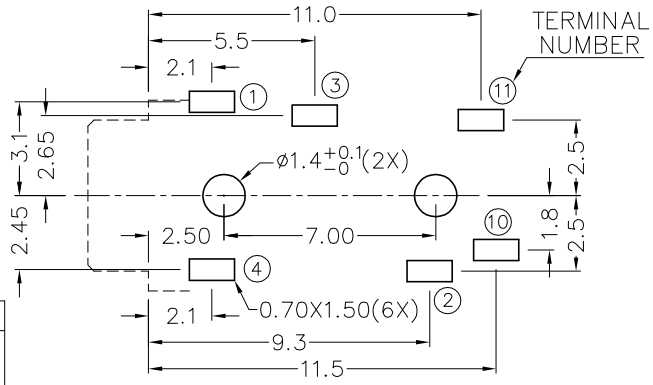

PCB LAYOUT
(BOTTOM VIEW)

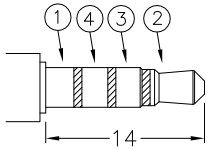

ø3.5 MATE PLUG

MODEL NO.	TSH-3896-2	TSH-3895A-2	TSH-3895B-2	TSH-3894-2
SCHEMATIC	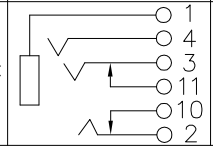	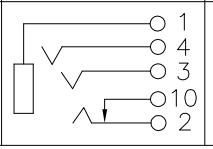	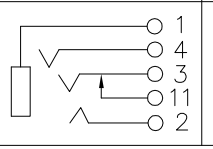	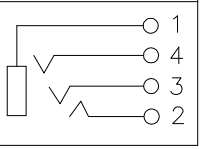

CHAMPWAY 冠泰電子有限公司
CHAMPWAY ELECTRONICS CO., LTD.

DESIGN	T.Y.LI	DATE	28-9-2007	SCALE	4:1
DRAWING	T.Y.LI	DATE	28-9-2007	MATERIAL	＊
CHECK		DATE		DWG. NO.	TZ\SH389-2-PA6T/A
APPROVAL		DATE		SHEET	

PART NAME	3.5mm STEREO JACK	TOLERANCE UNLESS OTHERWISE SPECIFIED:	0.0±0.2 0.00±0.1 0.000±0.05
PART NO.	TSH-389-2	UNIT: mm	