NO.	COMPONENTS	MATERIALS	FINISH/COLOR SPECIFICATION	QUANTITY
1	Housing	LCP,UL94V-0	Natural	1
2	Contact	PHOSPHOR BRONZE, T=0.25mm	Surface Plating:See "Note" Under Plating:1~3μm Ni.	N
3	Mylar	T=0.10mm THERMOSTABLE	Yellow	1

NOTE:
1.ALL MATERIAL MUST BE COMPLY WITH SS-00259 OR RoHS.
2.PART NO. LEGEND:
F51P-1A7*1-110**
- NO. OF POSITIONS
- 7A:PHOSPHOR BRONZE MATTER TIN
- 7D:PHOSPHOR BRONZE 0.05 m Au MIN
- 1A:LCP NATURAL

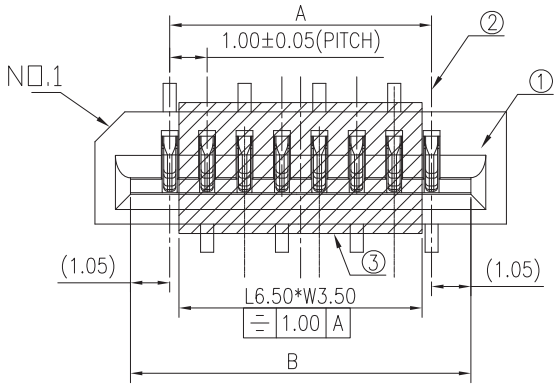

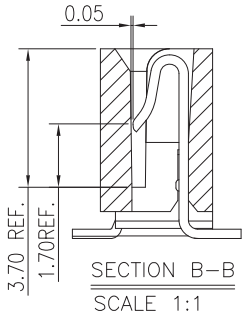

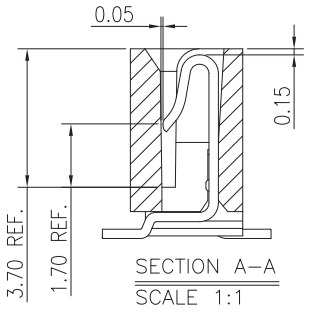

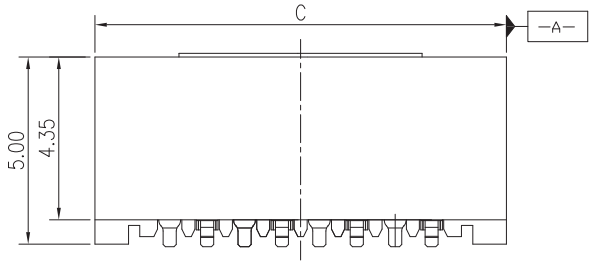

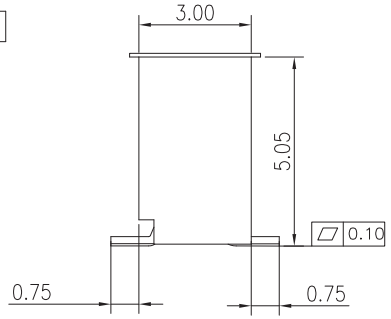

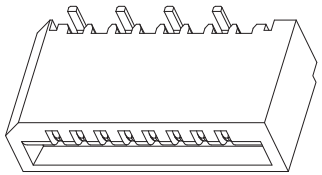

DIMENSION LIST:

NO.OF POS	A	B	C	NO.OF POS	A	B	C
3	2.00	4.10	6.00	17	16.00	18.10	20.00
4	3.00	5.10	7.00	18	17.00	19.10	21.00
5	4.00	6.10	8.00	19	18.00	20.10	22.00
6	5.00	7.10	9.00	20	19.00	21.10	23.00
7	6.00	8.10	10.00	21	20.00	22.10	24.00
8	7.00	9.10	11.00	22	21.00	23.10	25.00
9	8.00	10.10	12.00	23	22.00	24.10	26.00
10	9.00	11.10	13.00	24	23.00	25.10	27.00
11	10.00	12.10	14.00	25	24.00	26.10	28.00
12	11.00	13.10	15.00	26	25.00	27.10	29.00
13	12.00	14.10	16.00	27	26.00	28.10	30.00
14	13.00	15.10	17.00	28	27.00	29.10	31.00
15	14.00	16.10	18.00	29	28.00	30.10	32.00
16	15.00	17.10	19.00	30	29.00	31.10	33.00

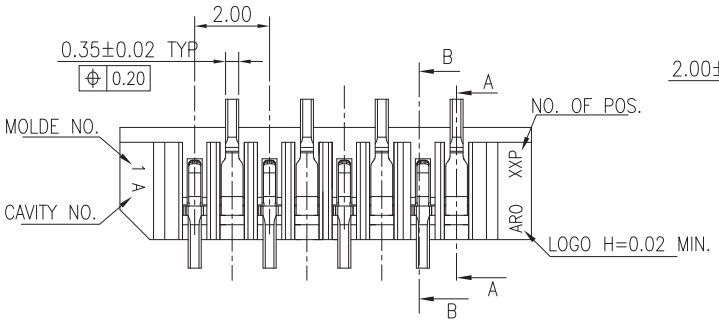

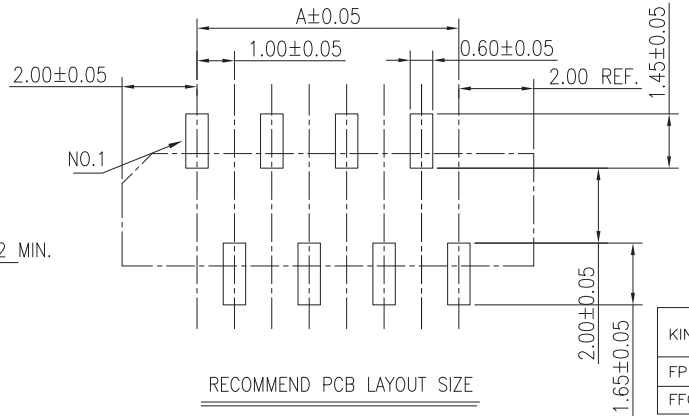

RECOMMEND PCB LAYOUT SIZE

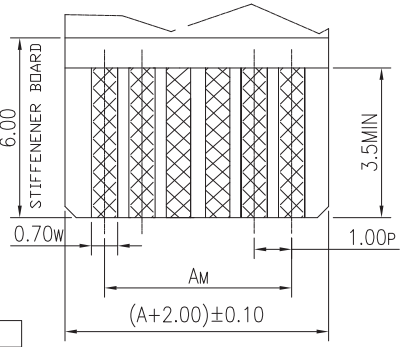

APPLICABLE FPC/FFC DIMENSION

THICKNESS:T=0.30±0.05

KIND	TOLERANCE		
	P	W	M
FPC	±0.02	+0.10 −0.05	±0.05
FFC	±0.05	±0.03	±0.10

△	DATE	ECR
△		
△		
△		
△		

CHAMPWAY 冠泰電子有限公司 CHAMPWAY ELECTRONICS CO., LTD.

PART NAME: FPC/FFC PH1.00 H5.00mm CONN. NON-ZIF VERTICAL B TYPE SMT

PART NUMBER: F51P-1A7*1-110**

S/C NO

APPROVAL	CHECKED	DRAWING	DRAWING NO	DATE	REV	SCALE	UNIT	NO.
Roy	Zhengxian.ye	YEBING	A-S0120	121226	A	N/A	mm	1/1

TOLERANCE:

X.	±0.50	X.°	±4°
.X	±0.30	.X	±3°
.XX	±0.20		
.XXX	±0.10		