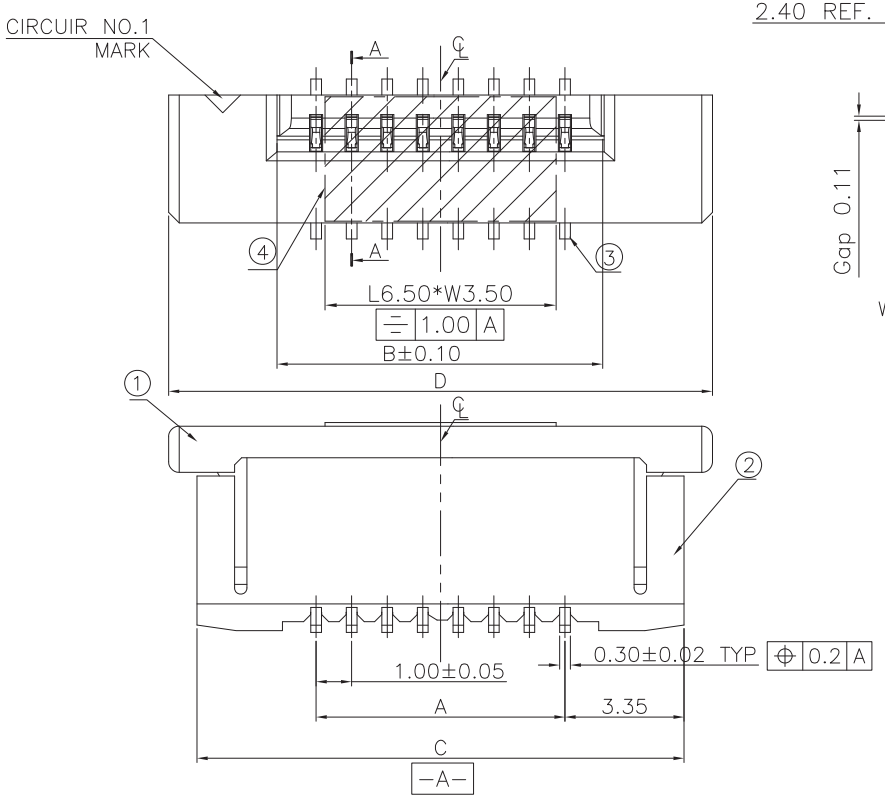


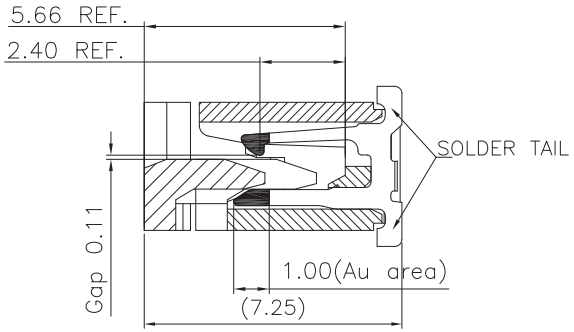


WHEN ACTUATOR IS OPENED
SECTION A-A
SCALE 1:1

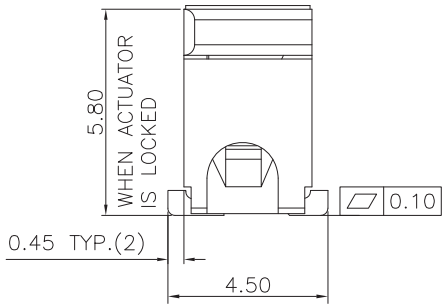


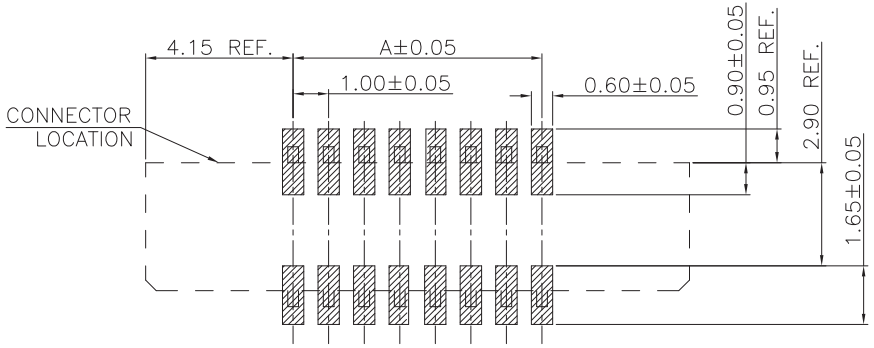


RECOMMEND PCB LAYOUT SIZE

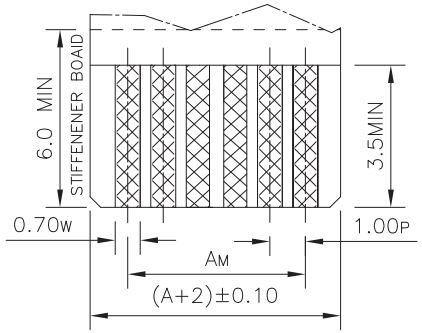


APPLICABLE FPC/FFC DIMENSION

THICKNESS:T=0.30±0.05

| KIND | TOLERANCE | | |
|---|---|---|---|
| | P | W | M |
| FPC | ±0.02 | $^{+0.10}_{-0.05}$ | ±0.05 |
| FFC | ±0.05 | ±0.03 | ±0.10 |

| NO. | COMPONENTS | MATERIALS | SPECIFICATION:FINISH/COLOR | QTY. |
|---|---|---|---|---|
| 1 | SLIDER | GLASS FILLED PA9T, UL94V-0 | BLACK | 1 |
| 2 | HOUSING | GLASS FILLED LCP, UL94V-0 | NATURAL | 1 |
| 3 | CONTACT | PHOSPHOR BRONZE, T=0.30mm | SURFACE PLATING: Au:0.05um/Matte UNDER PLATING:1~3um Ni | N |
| 4 | TAPE | T=0.1mm THERMOSTABLE | YELLOW | 1 |

NOTE:
1.ALL MATERIAL MUST BE COMPLY WITH GGP-001/SS-00259/RoHS.
2.PART NO. LEGEND:
F534-1A7L1-110**
- NO.OF POSITIONS
- 7L:2u" GOLD PLATING CONTACT AND SOLDER AREA, 40~120u"Ni UNDER PLATING OVER ALL
- 1A: LCP NATURAL
- 1B: PA9T BLACK
- 1C: PA6T BLACK

DIMENSION LIST:

| NO. OF POS. | A | B | C | D |
|---|---|---|---|---|
| 4 | 3.00 | 5.10 | 9.70 | 11.30 |
| 5 | 4.00 | 6.10 | 10.70 | 12.30 |
| 6 | 5.00 | 7.10 | 11.70 | 13.30 |
| 7 | 6.00 | 8.10 | 12.70 | 14.30 |
| 8 | 7.00 | 9.10 | 13.70 | 15.30 |
| 9 | 8.00 | 10.10 | 14.70 | 16.30 |
| 10 | 9.00 | 11.10 | 15.70 | 17.30 |
| 11 | 10.00 | 12.10 | 16.70 | 18.30 |
| 12 | 11.00 | 13.10 | 17.70 | 19.30 |
| 13 | 12.00 | 14.10 | 18.70 | 20.30 |
| 14 | 13.00 | 15.10 | 19.70 | 21.30 |
| 15 | 14.00 | 16.10 | 20.70 | 22.30 |
| 16 | 15.00 | 17.10 | 21.70 | 23.30 |
| 17 | 16.00 | 18.10 | 22.70 | 24.30 |
| 18 | 17.00 | 19.10 | 23.70 | 25.30 |
| 19 | 18.00 | 20.10 | 24.70 | 26.30 |
| 20 | 19.00 | 21.10 | 25.70 | 27.30 |
| 21 | 20.00 | 22.10 | 26.70 | 28.30 |
| 22 | 21.00 | 23.10 | 27.70 | 29.30 |
| 23 | 22.00 | 24.10 | 28.70 | 30.30 |
| 24 | 23.00 | 25.10 | 29.70 | 31.30 |
| 25 | 24.00 | 26.10 | 30.70 | 32.30 |
| 26 | 25.00 | 27.10 | 31.70 | 33.30 |
| 27 | 26.00 | 28.10 | 32.70 | 34.30 |
| 28 | 27.00 | 29.10 | 33.70 | 35.30 |
| 29 | 28.00 | 30.10 | 34.70 | 36.30 |
| 30 | 29.00 | 31.10 | 35.70 | 37.30 |

| DATE | ECR |
|---|---|
| | |
| | |
| | |
| | |

CHAMPWAY 冠泰電子有限公司 CHAMPWAY ELECTRONICS CO., LTD.

PART NAME: FPC/FFC PH1.00 H5.80mm CONN. ZIF VERTICAL TYPE SMT

PART NUMBER: F534-1A7L1-110**

S/C NO

| APPROVAL | CHECKED | DRAWING | DRAWING NO | DATE | REV | SCALE | UNIT | NO. |
|---|---|---|---|---|---|---|---|---|
| Roy | Zhengxian. ye | Henry | A-S0032 | 120817 | A | N/A | mm | / |

TOLERANCE:

| | | | |
|---|---|---|---|
| X. | ±0.50 | X.° | ±4° |
| .X | ±0.30 | .X° | ±3° |
| .XX | ±0.20 | | |
| .XXX | ±0.10 | | |