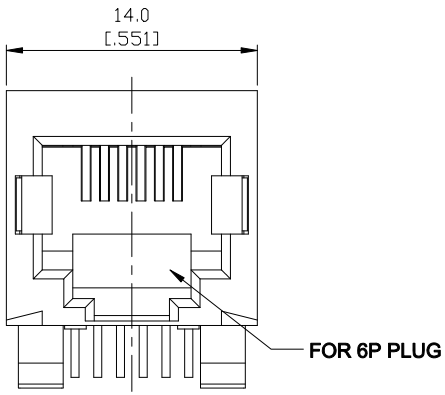

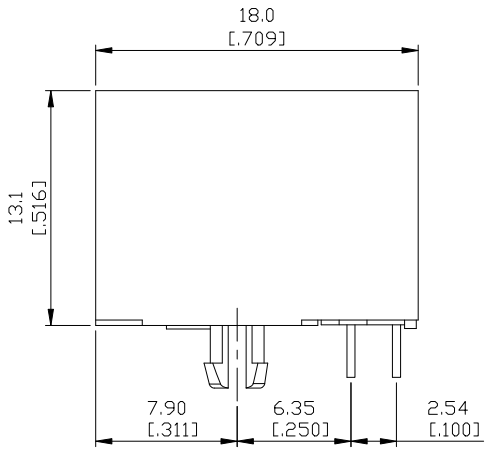

Electrical Characteristics :
Insulation Resistance : 500MΩ Min.
Contact Resistance : 30mΩ Max.
Withstand Voltage : 1000 VAC 1 minute.
Current Rating : 1.5A

Material:
Housing : Thermoplastic UL94V-0
Contact : Full Gold Plating
Spring Wire : Dia 0.45mm Phosphor Bronze
Optional Gold Plating Over Nickel
CUL File No : E215573

PART NO : 8 3 8 6 B - B ∗ 1 S

- Positions
- Contacts
- Housing Color
  B : Black
- Gold Plated
  0 : Gold Flash
  1 : 6u"
  2 : 15u"
  3 : 30u"
  4 : 50u"
- Ports
- For RJ11

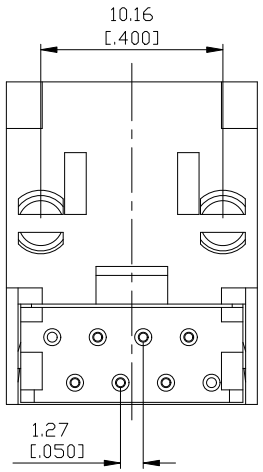

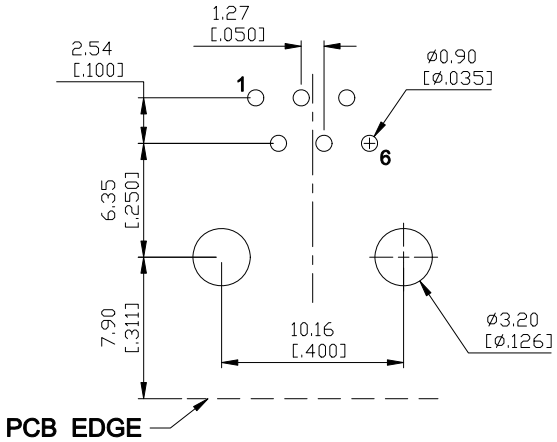

SUGGESTED PCB LAYOUT
TOP VIEW

CHAMPWAY 冠泰電子有限公司
CHAMPWAY ELECTRONICS CO., LTD.

ZONE	REV.	DESCRIPTION	DATE	APPD.
Ⓐ	A.1	Withstand Voltage 500修改為1000VAC	2008-08-01	Nick
Ⓑ				
Ⓒ				
Ⓓ				
Ⓔ				

FILE NO : 83 (SERIES)

TOLERANCE(公差) :
0.000 mm ± 0.075 mm
0.00 mm ± 0.15 mm
0.0 mm ± 0.25 mm

TITLE 圖 名	NON-SHIELDED RJ11 SIDE ENTRY PCB JACK			UNIT 單位	mm inch
PART NO. 料 號	8386B-B∗1S			SCALE 比 例	1 : 1
REV. 版 本	A.1	DATE 日 期	2007-06-14		
CHECKED BY 審 核	Michael		DRAWN BY 製 圖	Valiant	