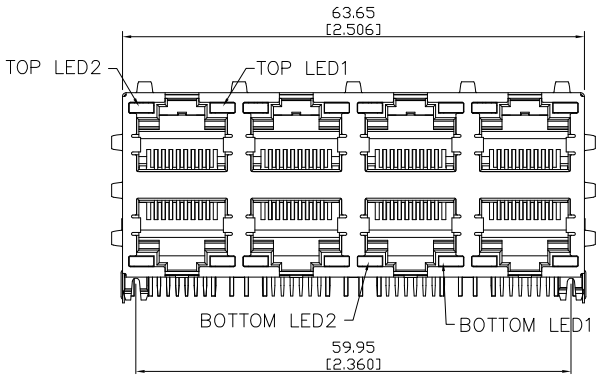

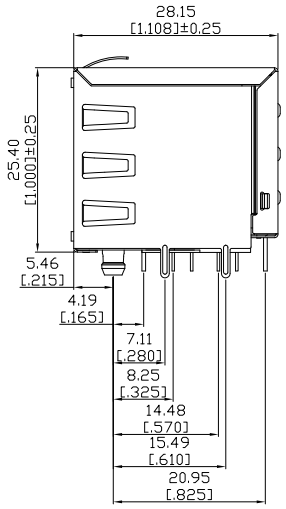

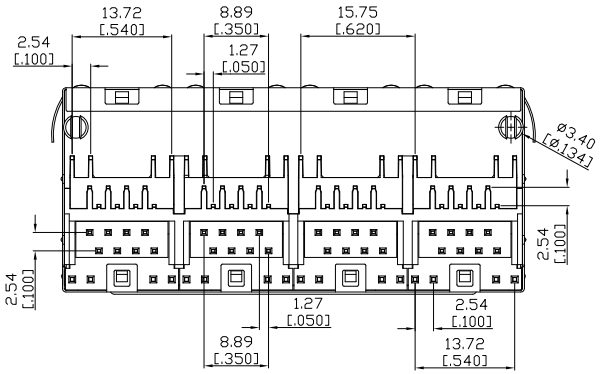

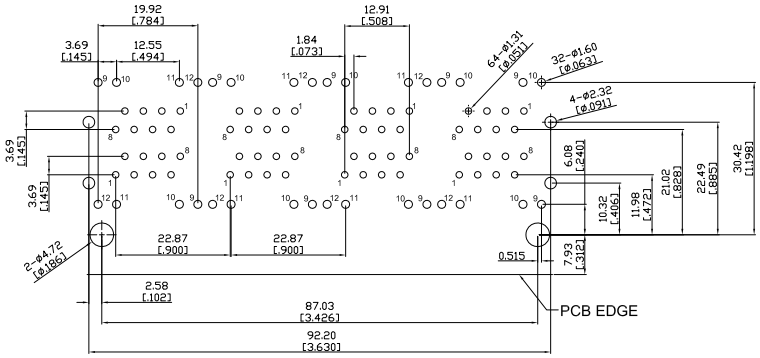

RECOMMENDED PCB LAYOUT
TOP VIEW
(scale 3:2)

Electrical Characteristics :
- Insulation Resistance : 500M£[Min.
- Contact Resistance : 50m£[Max.
- Withstand Voltage : 1000 VAC 1 minute.
- Current Rating : 1.5A

Material:
- Housing: Thermoplastic UL 94V-0
- Terminal: 0.35mm Thickness Phosphor Bronze Plated With Gold In Contact Area And Tin In Solder Area.
- Shield : Brass, Nickel Plating.

CUL File No : E215573

PART NO : 8 1 8 8 S - B ∗ 4 ∗ - D

- Positions
- Contacts
- Housing Color
  B : Black
- LED OPTIONS
- Ports
- Gold Plated
  0 : Gold FLash
  1 : 6u"
  2 : 15u"
  3 : 30u"
  4 : 50u"

LED Color Options Table

LED Color Options		LED DASH OPTION
LED 2 (Left)	LED 1 (Right)	
No LED	No LED	0
Yellow	Green	1
No LED	Green	2
Yellow	No LED	3
Green	Yellow	4
Green	Green	5
Yellow	Yellow	6
Orange/Green	Orange/Green	7
Yellow/Green	Yellow/Green	8
Orange/Green	Yellow	9

CHAMPWAY 冠泰電子有限公司
CHAMPWAY ELECTRONICS CO., LTD.

ZONE	REV.	DESCRIPTION	DATE	APPD.
Ⓐ				
Ⓑ				
Ⓒ				
Ⓓ				
Ⓔ				

FILE NO : 81 (SERIES)

TOLERANCE(公差) :
0.000 mm ± 0.075 mm
0.00 mm ± 0.15 mm
0.0 mm ± 0.25 mm

TITLE 圖 名	DOUBLE ROW WITH-SHIELDED WITH-LED RJ45 SIDE ENTRY PCB JACK			UNIT 單位	mm inch
PART NO. 料 號	8188S-B∗4∗-D			SCALE 比 例	1 : 1
REV. 版 本	A.0	DATE 日 期	2010-03-23		
CHECKED BY 審 核	Aaron	DRAWN BY 製 圖	Eric		