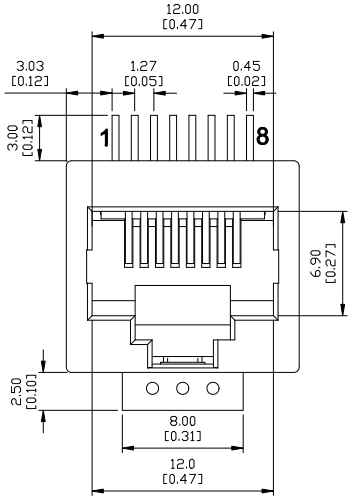

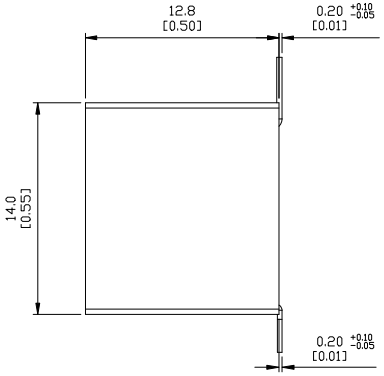

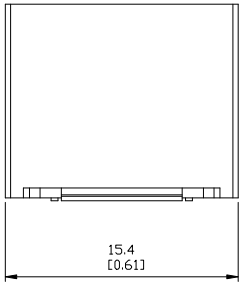

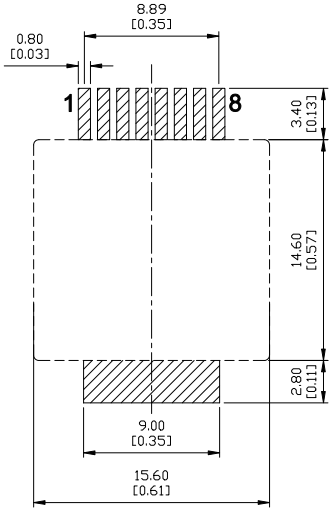

RECOMMEMDED P C B LAYOUT
TOP VIEW

Electrical Characteristics :
- Insulation Resistance : 500MΩ Min.
- Contact Resistance : 50mΩ Max.
- Withstand Voltage : 1000 VAC 1 minute.
- Current Rating : 1.5A

Material:
- Housing: Thermoplastic UL 94V-0
- Contact : Selective Gold Plating
- Terminal: 0.35mm Thickness Phosphor Bronze Plated With Gold And Tin In Solder Area.
- Fork: 0.30mm Thickness Copper Alloy,Plated With Nickel.

PART NO : 6 7 8 8 B - B∗1 - L1

- Positions
- Contacts
- Housing Color
  B : Black
- Nylon
  L1: Housing + Insert
- Ports
- Gold Plated
  0 : Gold Flash
  1 : 6u"
  2 : 15u"
  3 : 30u"
  4 : 50u"

CHAMPWAY 冠泰電子有限公司
CHAMPWAY ELECTRONICS CO., LTD.

ZONE	REV.	DESCRIPTION	DATE	APPD.
Ⓐ				
Ⓑ				
Ⓒ				
Ⓓ				
Ⓔ				

FILE NO : 67 (SERIES)

TOLERANCE(公差) :
0.000 mm ± 0.075 mm
0.00 mm ± 0.15 mm
0.0 mm ± 0.25 mm

TITLE 圖 名	RJ45, 8P8C, Unshielded, Vertical			UNIT 單位	mm
PART NO. 料 號	6788B-B∗1-L1			SCALE 比 例	1 : 1
REV. 版 本	A.0	DATE 日 期	2010-03-01		
CHECKED BY 審 核	Aaron		DRAWN BY 製 圖	Eric	