No.	Parts	Material	Remarks
5	Frame	Stainless Steel	
4	Lever	PolyAmide or PPHS. Resin	Black or Dark Brown Color
3	Contact Piece	Copper Alloy	Silver Plating
2	Terminal	Phosphor Bronze	Silver Plating
1	Case	PPHS. Resin	Black or Dark Brown Color

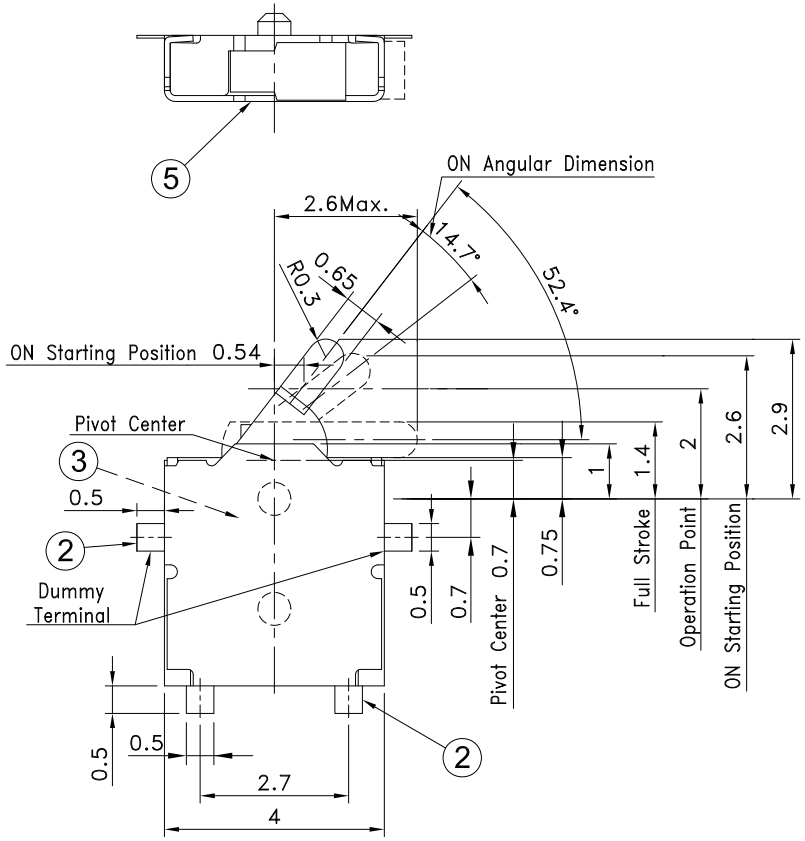

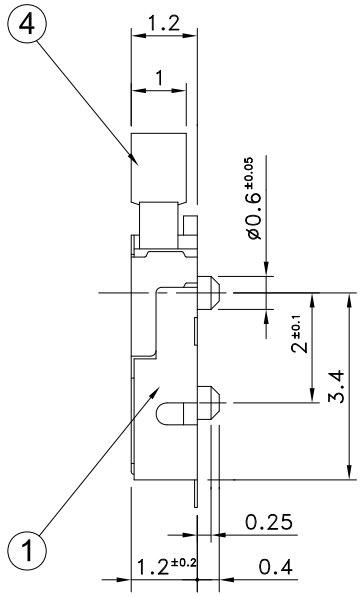

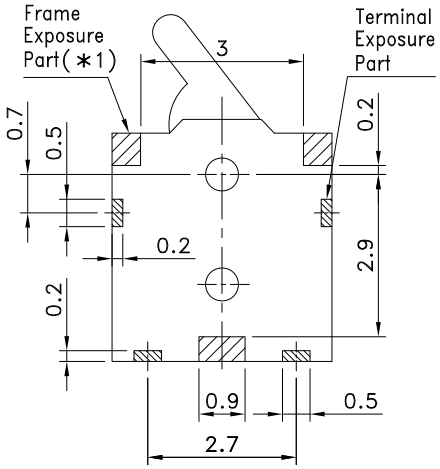

∗1 : Please don't make the pattern of under the frame exposure part. Because the frame and the singal terminal might be short-circuited.

P.C.B TERMINAL POSITION

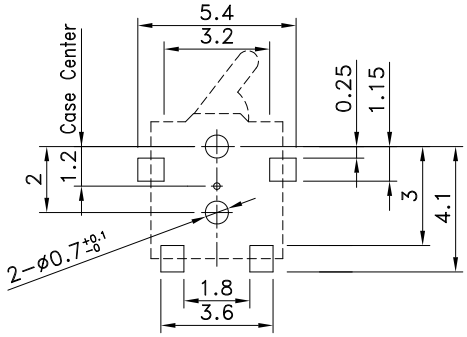

SPECIFICATIONS

1. Rating	:DC3V 50μA~DC5V 10mA
2. Contact Resistance	:500mΩ Max.
3. Insulation Resistance	:100MΩ Min. at DC 100V
4. Dielectric Strength	:AC 100V for 1 Minute
5. Operating Force	:30gf Max.
6. Life	:50,000 Cycles
7. Package	:5,000 Pcs/Reel
8. Operating Temperature Range	:-10~+60°C
9. Reflow Soldering Profile	: According Reflow Profile Max. 2 Times

CIRCUIT ARRANGEMENT

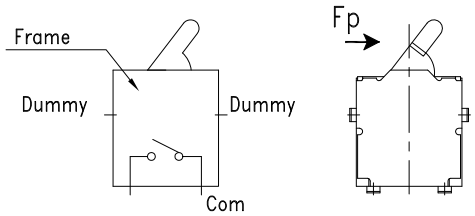

∗ Contact and Insulation on dose not apply on between frame and common Terminal.

∗ Contact and Insulation on dose not apply on between Dummy Terminal and common Terminal.

Designed by L.Y.D		CHAMPWAY 冠泰電子有限公司 CHAMPWAY ELECTRONICS CO., LTD.	
Checked by			
Approved by	Unit mm	Scale 1/1	Date 2011.10.14
Item Detect Swith	Tool A-Cad	Sheet 1/1	Rev. 0
Model H:1.2mm Normal Open	Drawing name ES109AMP-NRS012R-R		